SALES DRAWING SALES DRAWING SALES DRAWING

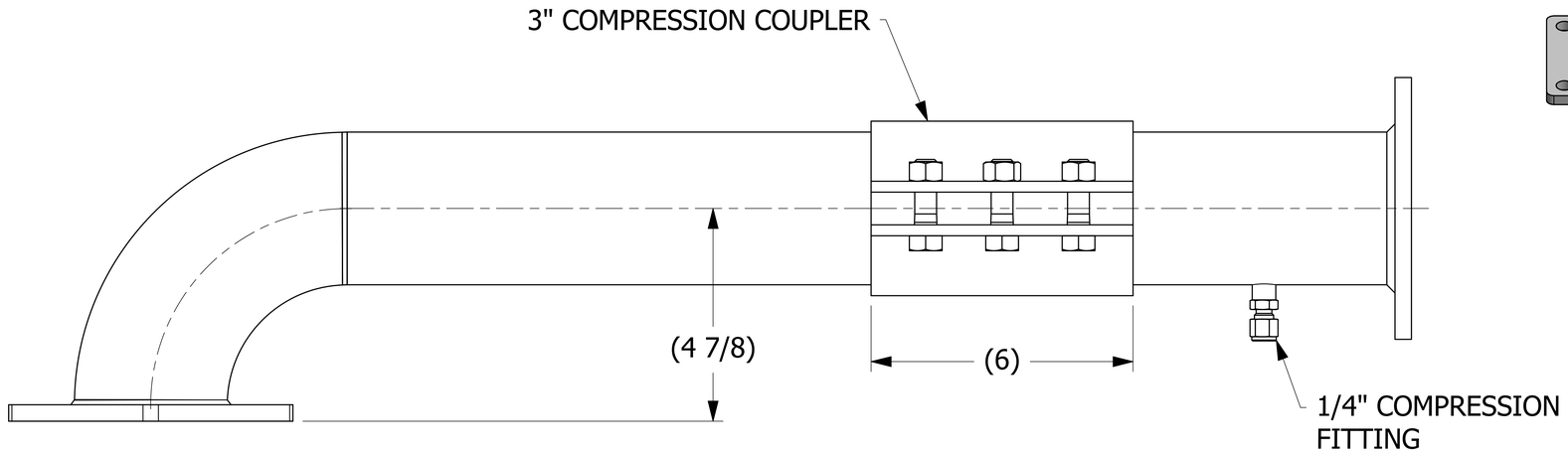

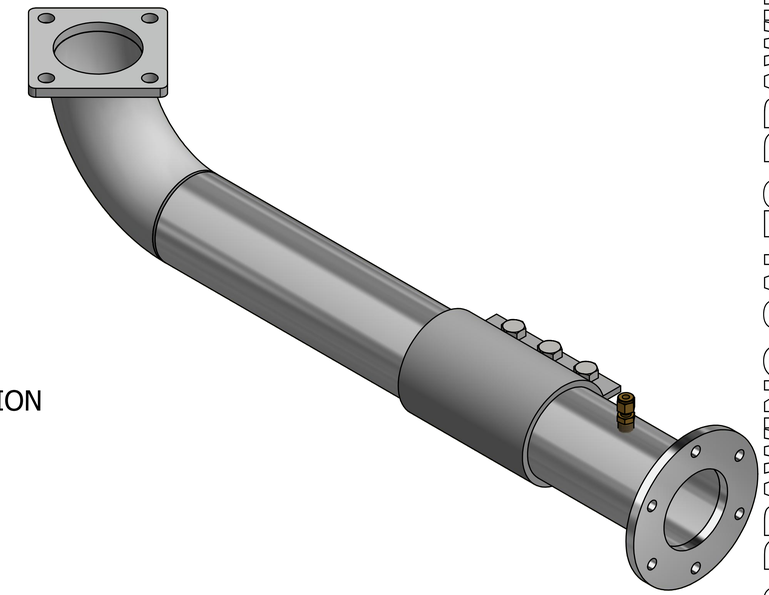

ISOMETRIC VIEW

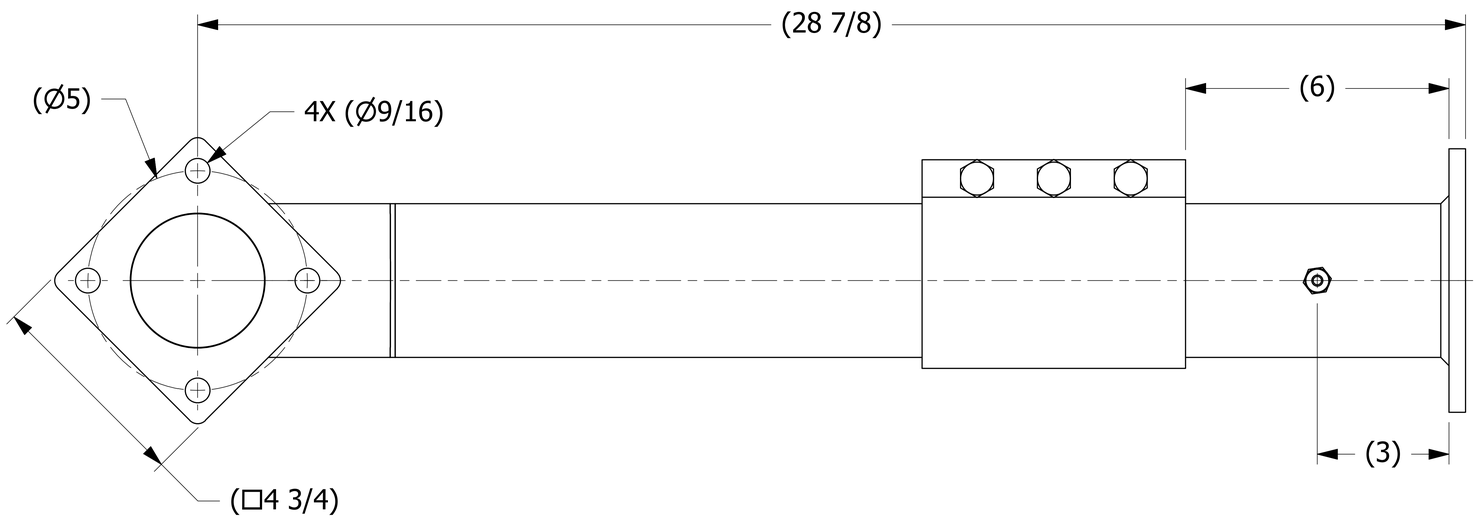

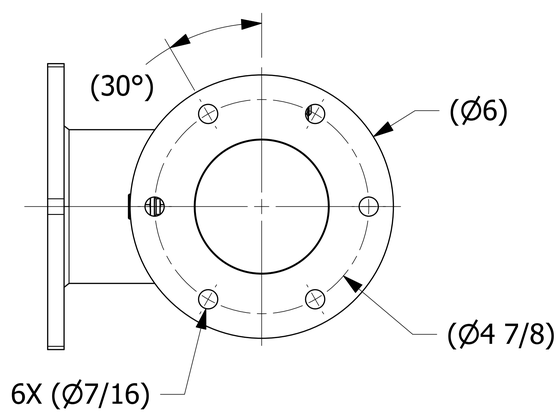

NOTE:
PIPE IS 3" SCHEDULE 40.

REV	BY	DATE	REF #	
B	TAK	11/13/20	202011131519	TAK
				PUB

UNLESS OTHERWISE SPECIFIED DIMENSIONAL TOLERANCES
FRACTIONAL: ±1/16
X.XX: ±.03
X.XXX: ±.015
ANGULAR: ±1°
DEBURR ALL SHARP EDGES. ALL MACHINED SURFACES TO HAVE A 125 RMS FINISH UNLESS NOTED OTHERWISE.
THIRD ANGLE PROJECTION

DRAWN BY:	
CHECKED BY:	
PROTOTYPE DATE:	12/3/2002
APPROVED FOR PRODUCTION BY:	ACC
PRODUCTION DATE:	2/15/2002
SIZE:	E
DRAWING #:	17470

SALCO PRODUCTS, INC.

PART NAME: PD AIR PIPE ASSEMBLY 3"X90°

MATERIAL: ALUMINUM/CS/BRASS/NEOPRENE

PROJECT #:

SHEET #: 1 OF 1

SCALE: 3:4

PART #: PD3A90F06

THIS PRINT, PROPERTY OF SALCO PRODUCTS INC, CONTAINS PROPRIETARY INFORMATION AND MUST NOT BE COPIED, REPRODUCED, OR USED DETRIMENTALLY TO OUR INTEREST.